USC Viterbi
School of Engineering

Performance Bounds of Asynchronous Circuits with Mode-Based Conditional Behavior

Mehrdad Najibi Peter A. Beerel

18th IEEE International Symposium on Asynchronous Circuits and Systems

USC

Talk Outline

USC Viterbi School of Engineering

- Context and Motivation
  - Slack Matching and Conditional Circuits
- Previous Work
  - Performance analysis and Slack Matching
- Mode-Based Problem Statement
  - Intuitive introduction and Petri net formalism of modes
- Proof Technique and The Bound
  - Super-segments and their application to conditional slack matching
- Summary and Future Work

Motivation - Async Pipelines and Slack Matching

USC Viterbi School of Engineering

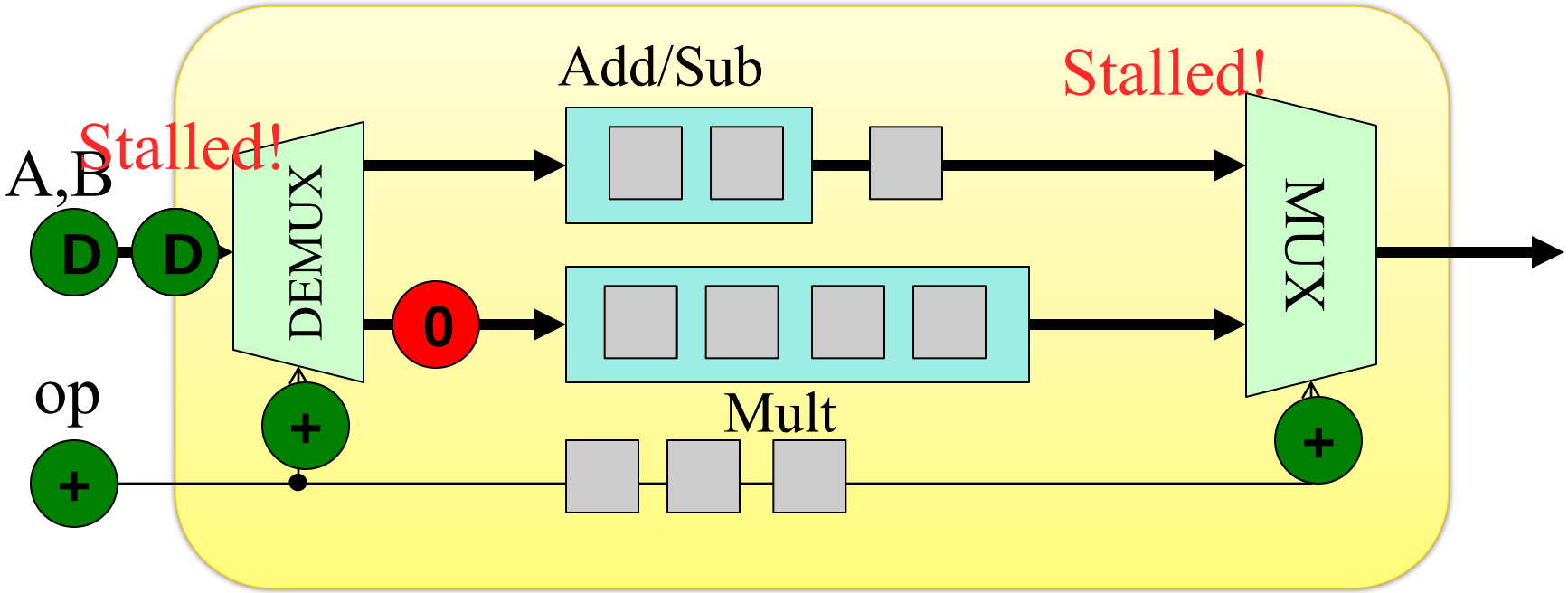

The Slack Matching Problem - Add minimum number of pipeline buffers to the circuit to meet a target cycle time τ.

- This problem is unique to asynchronous design
- Unfortunately, often adds up to 30% area and power

Peter A. Beerel; Andrew M. Lines; et. al. , ***"Slack matching asynchronous designs,"*** ASYNC'06

Motivation – Conditional Communication

USC Viterbi School of Engineering

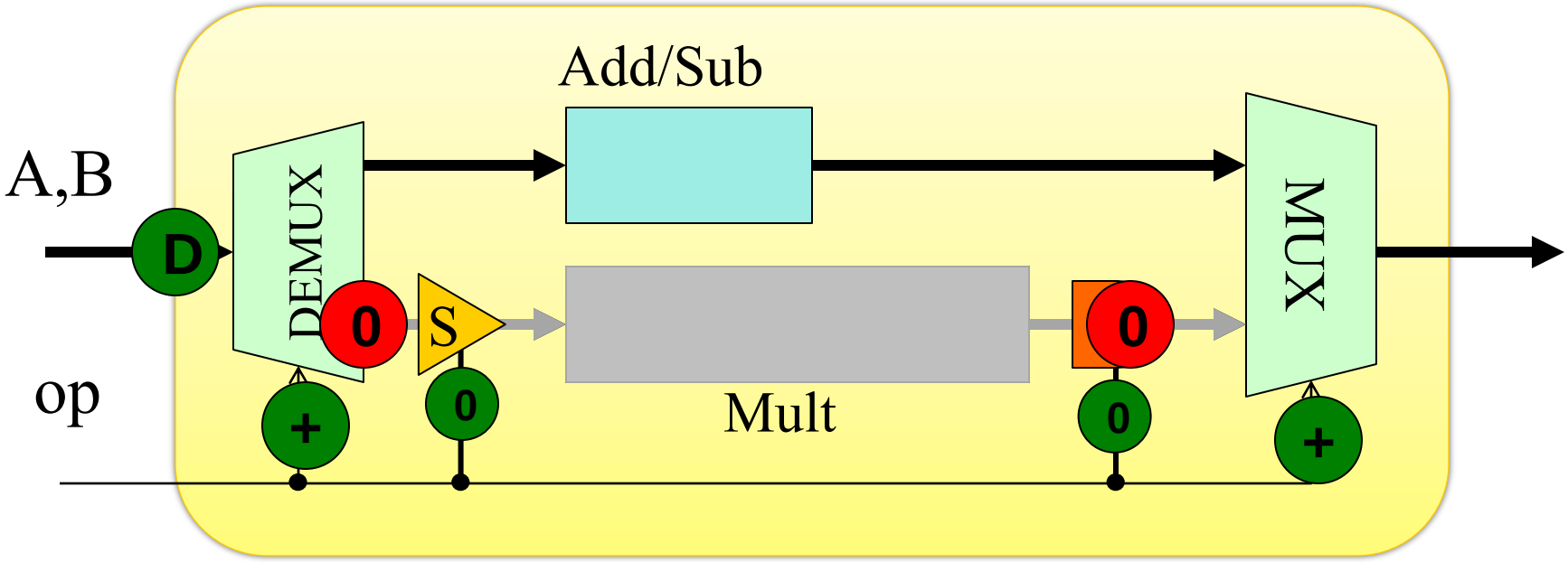

Conditional communication reduces token flow, saving power

- Traditionally - manually introduced via user-created decomposition
- Recent research - automatically introduced via Operand Isolation

Arash Saifhashemi, Peter A. Beerel, "***Automatic Operand Isolation in High-Throughput Asynchronous Pipelines,"*** to be submitted, PATMOS'12

Previous Works
Performance Bounds

USC Viterbi School of Engineering

Unconditional Circuits

- Throughput bounds – importance of bubbles [Greenstreet‘90]
- Analysis of Meshes [Pang’97]
- Canopy Graphs [Williams’91, Lines’98]
- Bottleneck Analysis [Taubin’09]
- Time Separation of Events [Hulgaard’93, Chakraborty’01]
- Variable delays [Yahya’07]

Conditional Circuits

- Xie and Beerel – Markovian (1997) and Monte-Carlo (1998) Analysis
- Canopy Graph Based Estimation [Gill‘08]

None yield closed-form performance bound for conditional circuits

Previous Work
Slack-Matching

USC Viterbi School of Engineering

Unconditional Circuits

- MILP/LP formulation [Beerel'06,Prakash'06]

Conditional Circuits

- Bottleneck Removal Approaches [Gill'09]
  - Unfortunately, cannot give guaranteed performance
- Heuristic Iterative Algorithms [Venkataramani'06]
  - Simulation-based performance guarantees
- Industry approach [Beerel'11]
  - Treat conditional circuit as unconditional – ignore conditionality
  - *We believe that this is conservative – but no proof given (till now)!*

Mode-Based Problem Statement

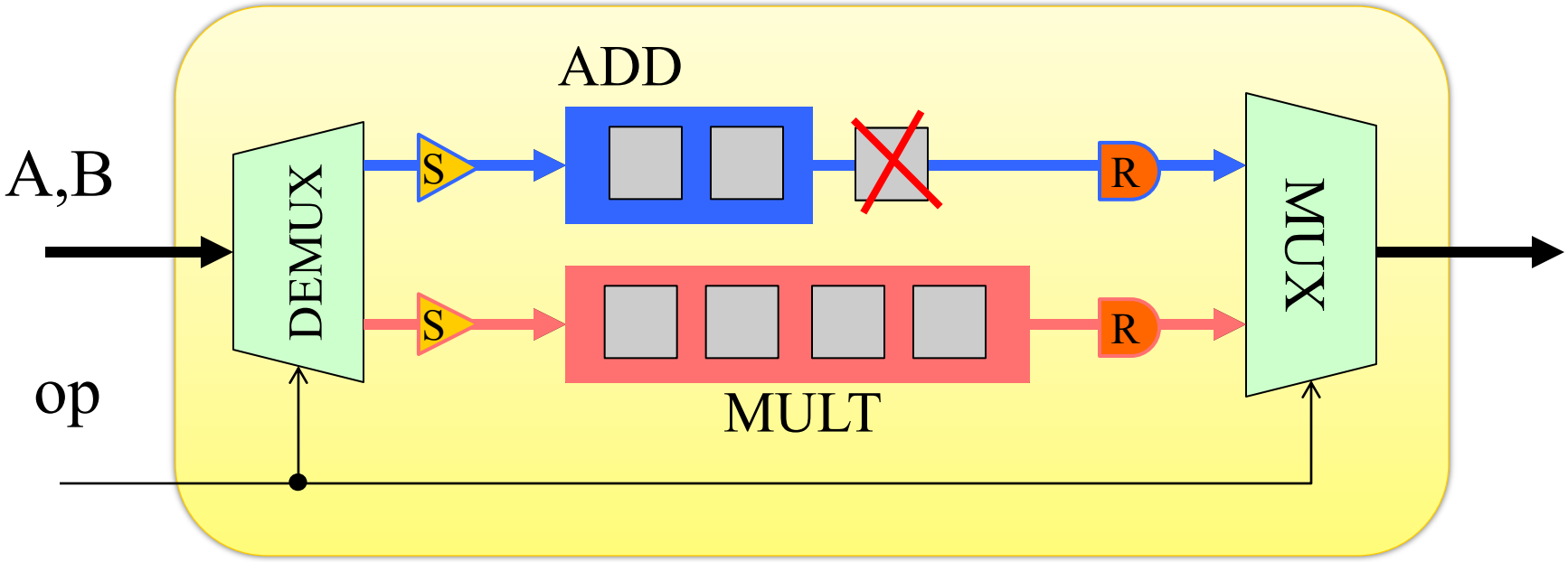

Find an upper bound on the <u>average cycle time</u> of the circuit given:

- Frequency of each mode
- Cycle time of each mode
- Unknown mode order

The Core Idea

Impact of mode change spans multiple (k) segments, i.e., cycles
– this paper bounds k

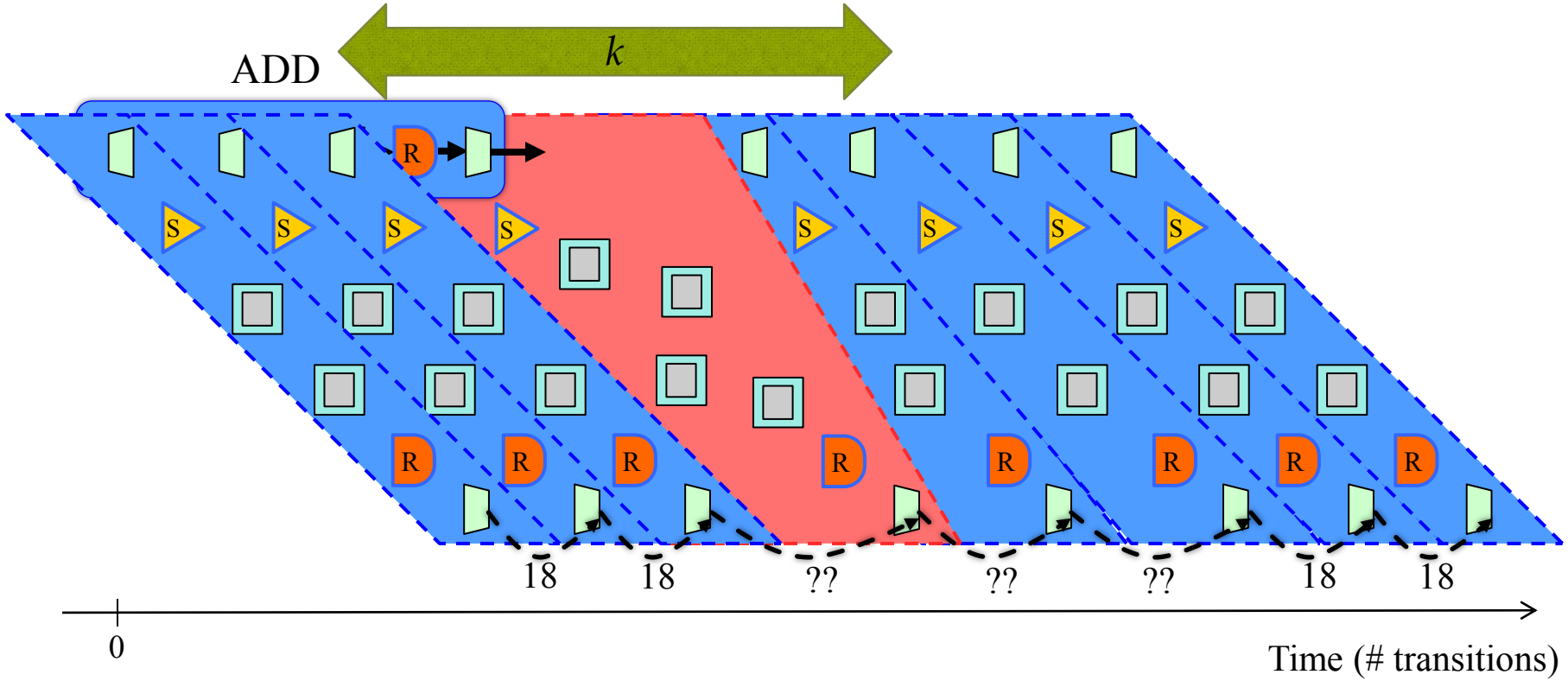

Performance Model

USC Viterbi School of Engineering

- Petri-Nets: $\langle P, T, F, M_0 \rangle \quad F \subset P \times T \cup T \times P \quad M_0 : P \mapsto \mathbb{N}$
  - Places are annotated with delay values
  - Choices model conditionality

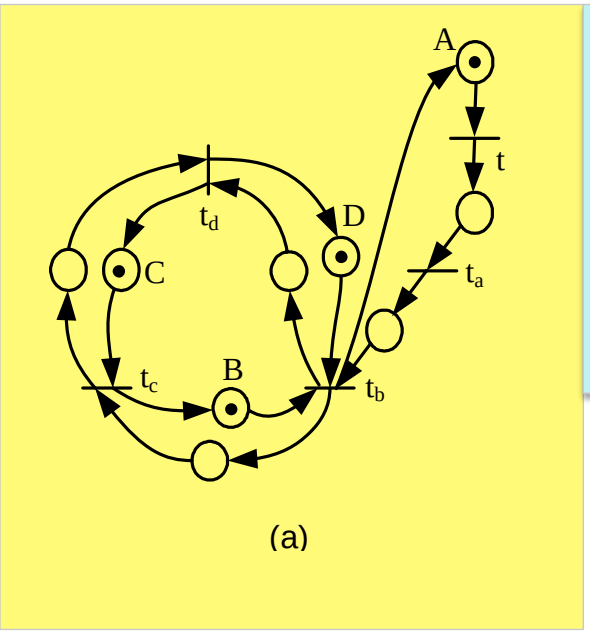

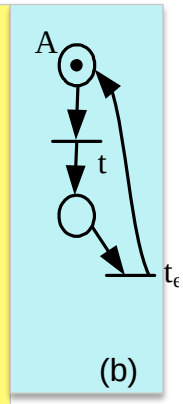

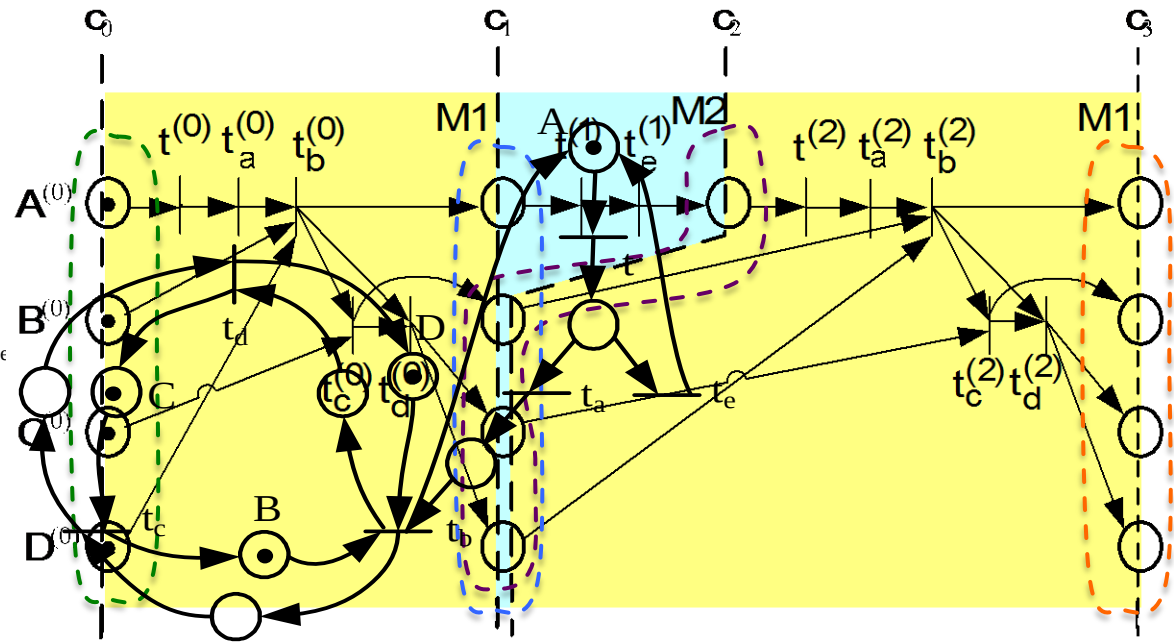

Example:
Modeling Async Circuits using Petri-Nets

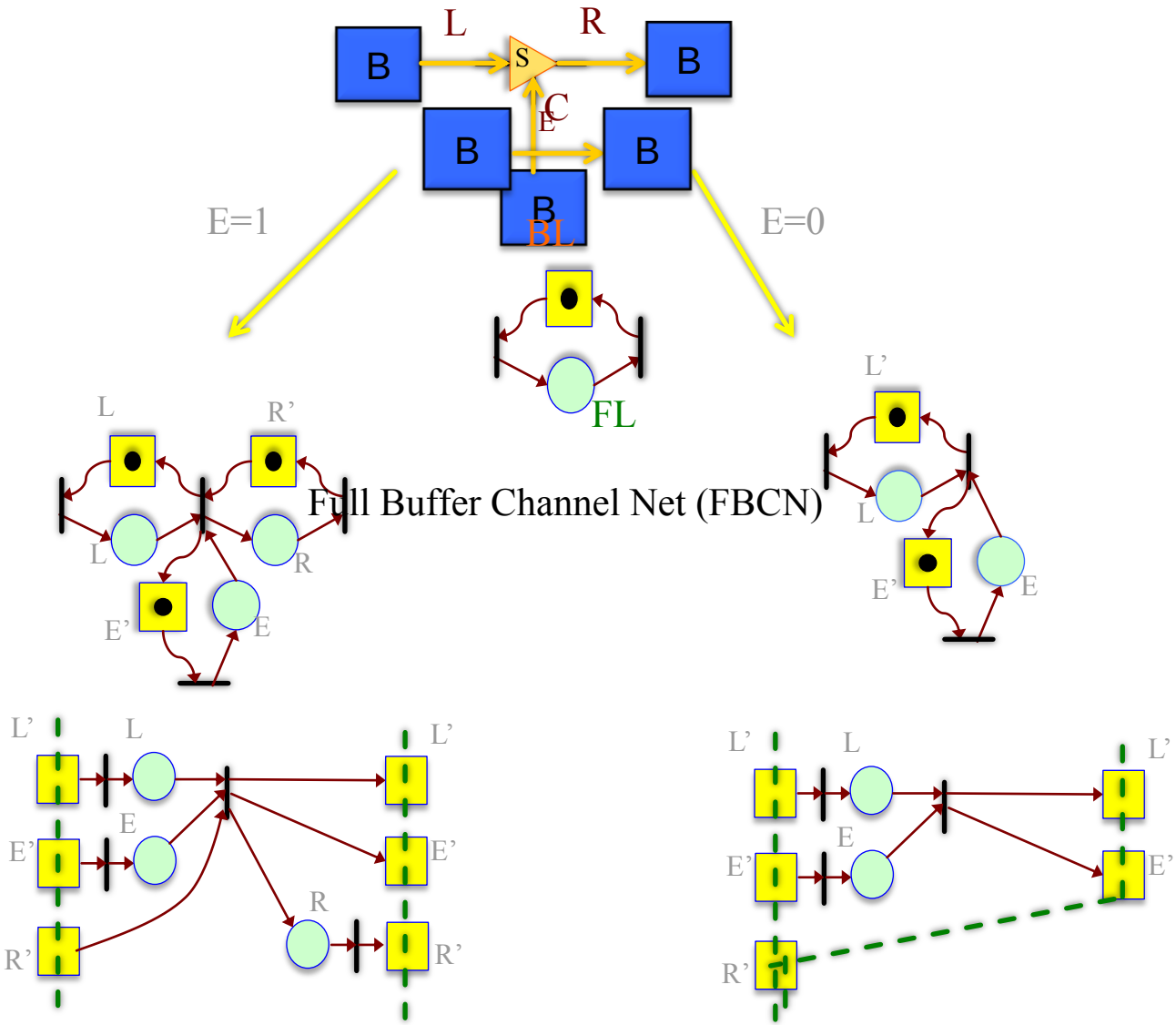

Elevation - Proof Technique
Super-Segments

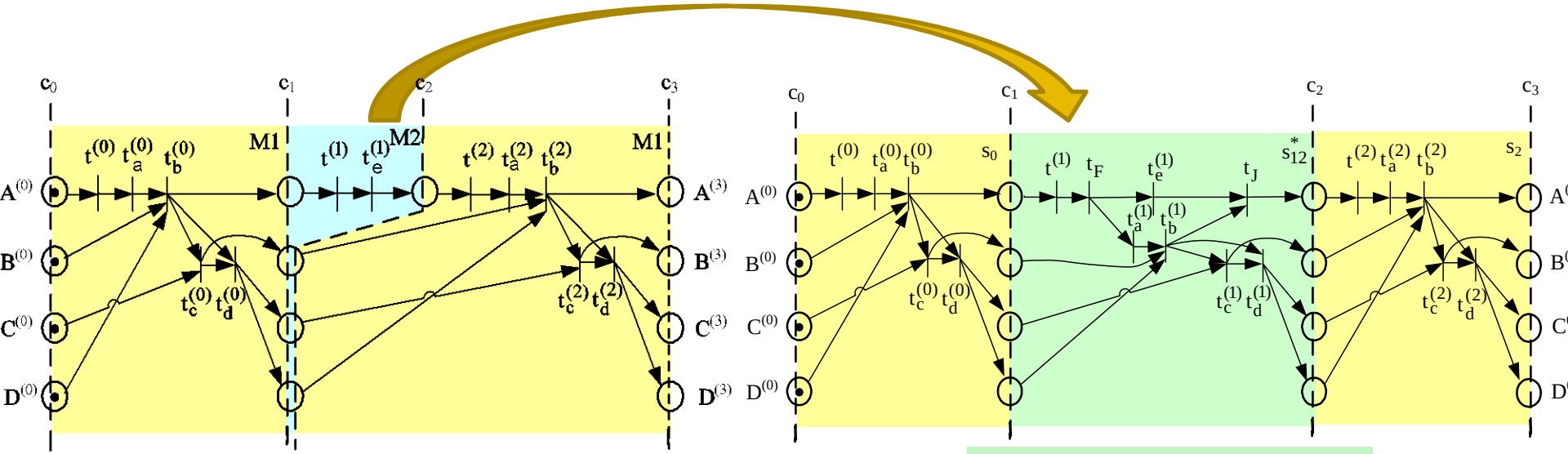

This is also marked graph with cycle time $\tau_{Elevated}$

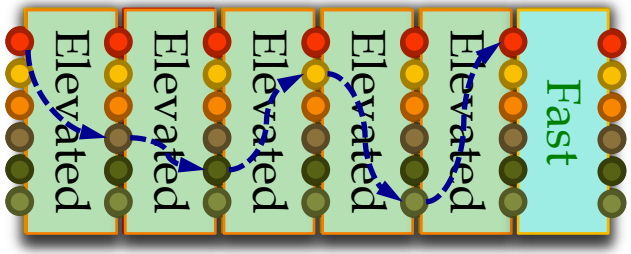

$$\boldsymbol{Delay(cycle)} \leq 5\tau_{\boldsymbol{Elevated}}$$

Elevation - Motivating Example

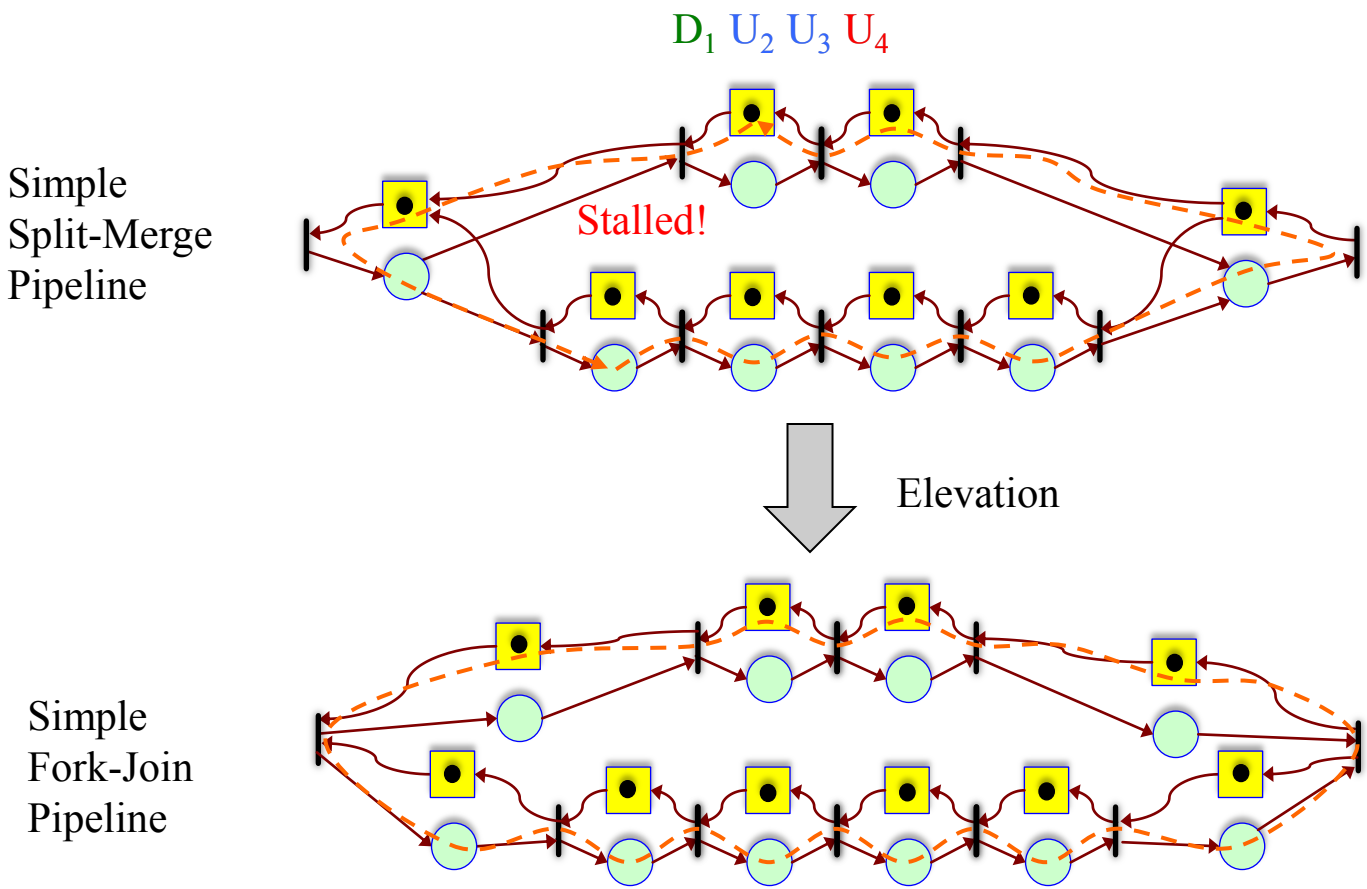

Theorem: The average cycle time of the conditional Petri-net is bounded by the cycle time of the maximum super-segment

Definitions

- Time Separation of Events

$$\gamma_U^{(k)}(s,t,\epsilon) = \tau(t^{(k+\epsilon)}) - \tau(s^{(k)})$$

- Average Cycle Time

$$\bar{\gamma}_U(t) = \lim_{n\to\infty} \frac{\gamma^{(0)}(t,t,n)}{n}$$

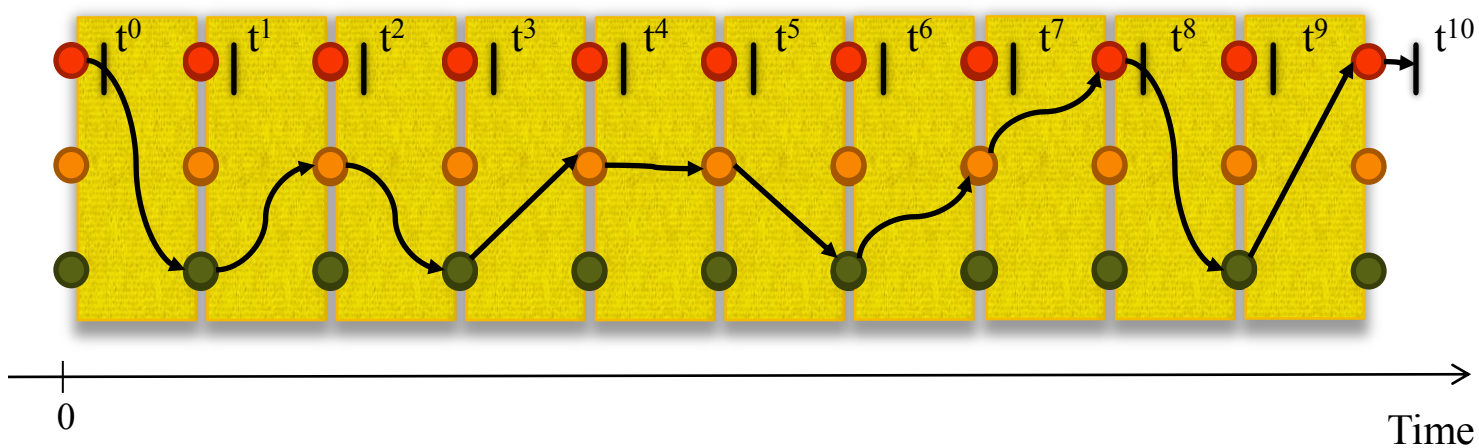

Assumptions to Derive the Bound

USC Viterbi School of Engineering

- Frequency of modes is known
  - The exact sequence of modes is not known
- Petri-Net of the circuit has the following properties
  - Safe & Live
  - Reversible
  - Unique–Choice
  - A reachable marking exists which marks all the simple cycles of the Petri-Net.
- Super-segment cycle times are known

Bound Formulation

USC Viterbi School of Engineering

$$\bar{\gamma}_U(t) \leq \sum_{j=1}^{m} \hat{f}_j \cdot \tau(s_j^*)$$

$$\begin{cases} \hat{f}_m = Min(f_m \cdot \kappa, 1) \\ \hat{f}_j = Min(f_j \cdot \kappa, 1 - \sum_{k=j+1}^{m} \hat{f}_k), \quad 1 \leq j < m \end{cases}$$

f_j : original frequency of the jth mode

$\tau(s_j^*)$: cycle time of the jth super-segment

$\hat{f}_j$: frequency of the jth super-segment, post elevation

κ : maximum number of tokens in a place-simple cycle

Proof: Step1

Known mode sequence: Cycle extraction

USC Viterbi School of Engineering

Modes : $m_1, m_2, m_3, m_4, m_5, m_6, m_7, m_8, m_9, m_{10}$

Segments: $s_1, s_2, s_3, s_4, s_5, s_6, s_7, s_8, s_9, s_{10}$

CycleTimes: $\tau_1 \geq \tau_2 \geq \tau_3 \geq \tau_4 \geq \tau_5 \geq \tau_6 \geq \tau_7 \geq \tau_8 \geq \tau_9 \geq \tau_{10}$

Super-segments: $s^*_1, s^*_2, s^*_3, s^*_4, s^*_5, s^*_6, s^*_7, s^*_8, s^*_9, s^*_{10}$

Elevated CT: $\tau^*_1 \geq \tau^*_2 \geq \tau^*_3 \geq \tau^*_4 \geq \tau^*_5 \geq \tau^*_6 \geq \tau^*_7 \geq \tau^*_8 \geq \tau^*_9 \geq \tau^*_{10}$

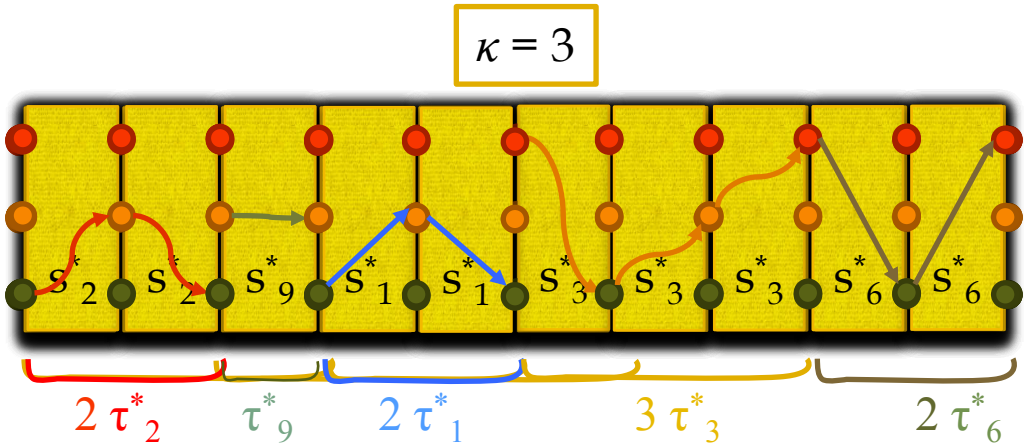

Proof Step 2:
Unknown mode sequence

USC Viterbi School of Engineering

- Worst Case Mode Sequence
  - Results in longest critical cycle
  - Cycle extraction on worst case mode sequence results in the proposed bound

slowest mode

κ -1 fastest modes

Segments: s_1, s_2, s_3, s_4, s_5, s_6, s_7, s_8, s_9, s_{10}

Elevated CT: $\tau^*_1 \geq \tau^*_2 \geq \tau^*_3 \geq \tau^*_4 \geq \tau^*_5 \geq \tau^*_6 \geq \tau^*_7 \geq \tau^*_8 \geq \tau^*_9 \geq \tau^*_{10}$

$\kappa = 3$

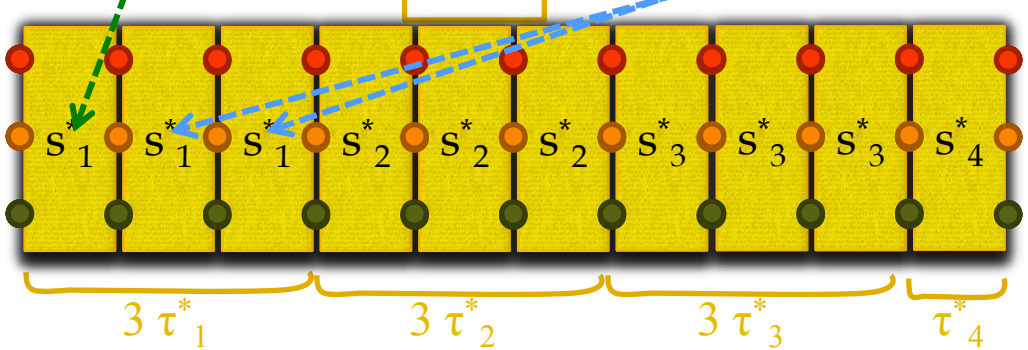

Distributing slowest modes once per κ segments yields worst case

Slack-matching Using The Bound - A Simple Example

USC Viterbi School of Engineering

Suppose there are two modes of operation

- "Slow" Mode s_1 – Slack matched to 36 transitions per cycle
  - Mode 1 is rare – 1% activity
- "Fast" Mode s_2 – Slack matched to18 transitions per cycle
- Max tokens in place-simple cycle κ of super-segment s^*_1 is 10
- The resulting bound is 18*0.9 + 36*0.1 = 19.8

If performance bound not good enough

- Slack match slow mode s_1 to 22.5
- The resulting bound is18.4

Yields lower area/power than slack matching as if unconditional

Summary and Conclusions

USC Viterbi School of Engineering

This paper presents several firsts

- First closed-form formula that bounds performance of conditional asynchronous circuits
- First proof that slack-matching conditional circuits unconditionally is conservative
- First performance-driven conditional slack-matching algorithm that saves area and power over unconditional slack matching

This paper provides useful intuition

- We can characterize the performance of a conditional circuit using marked graphs that describe their modes of operation
- Each mode change impacts a bounded number of segments
  - But, if not otherwise constrained, the bound is relatively large